HYD-159R-9W 6.5K

Panel light

DESCRIPTION

This recessed panel light made of PA+PC material features excellent heat dissipation performance, effectively reducing light attenuation and significantly extending the lifespan of the lamp. Internally selected high-quality LED chips, combined with high-transparency diffusers, not only achieve high efficiency and energy savings but also reduce dark areas in the light, providing uniform and bright illumination. The soft light is not dazzling, creating a comfortable and healthy visual environment. The recessed concealed design seamlessly integrates with various decoration styles, without being conspicuous, and adds to the aesthetic appeal of the space.

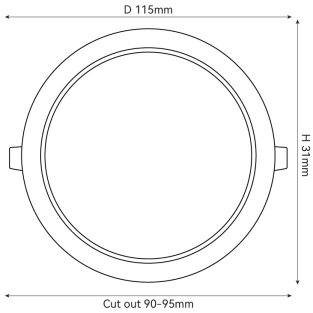

ELECTRICAL FEATURES

Power	9 W
Input Voltage	AC220 - 240V
Line Frequency	50/60 Hz
Powered By	HYUNDAI
Dimmable	No
Control interface	No

PRODUCT SPECIFICATION

Luminiaire luminous flux	774 lm
Efficiency	86 lm/w
CCT	6500 k
CRI	⩾80
Beam Angle	105°
Life span	20,000 h
Light source	HYUNDAI

TECHNICAL FEATURES

Materials	PA,PC
Surface Material	Diffuser-White (PC)
Body Color	White
Adjustability	Not Adjustable
IP Class	IP20
Installation way	Recessed
Dimension	D115 x H31
Cut Dimension	N/A

IES FEATURES

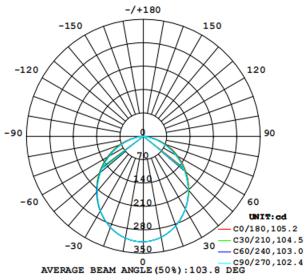

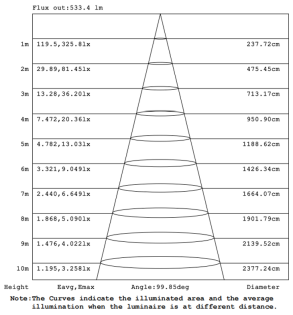

APPROVAL AND APPLICATION

Standard	CB,CE,ROHS
Working temperature	-20 °C ~ + 40 °C

PACKAGE SIZE

PCS/CTN	40
Carton Size	L49.5 x W26 x H29

APPLICATIONS

Healthcare, Offices, Schools, Supermarkets, Villas, Hotel, Office, Home