HYD-159R-12W 3K

Panel light

DESCRIPTION

This recessed panel light made of PA+PC material features excellent heat dissipation performance, effectively reducing light attenuation and significantly extending the lifespan of the lamp. Internally selected high-quality LED chips, combined with high-transparency diffusers, not only achieve high efficiency and energy savings but also reduce dark areas in the light, providing uniform and bright illumination. The soft light is not dazzling, creating a comfortable and healthy visual environment. The recessed concealed design seamlessly integrates with various decoration styles, without being conspicuous, and adds to the aesthetic appeal of the space.

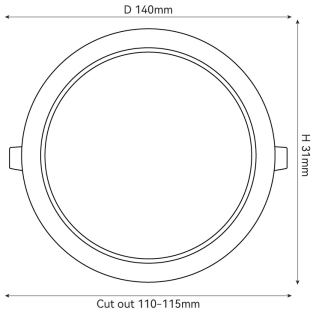

ELECTRICAL FEATURES

Power	12 W
Input Voltage	AC220 - 240V
Line Frequency	50/60 Hz
Powered By	HYUNDAI
Dimmable	No
Control interface	No

PRODUCT SPECIFICATION

Luminiaire luminous flux	996 lm
Efficiency	83 lm/w
CCT	3000 k
CRI	⩾80
Beam Angle	105°
Life span	20,000 h
Light source	HYUNDAI

TECHNICAL FEATURES

Materials	PA,PC
Surface Material	Diffuser-White (PC)
Body Color	White
Adjustability	Not Adjustable
IP Class	IP20
Installation way	Recessed
Dimension	D140 x H31
Cut Dimension	N/A

IES FEATURES

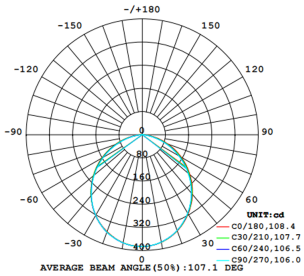

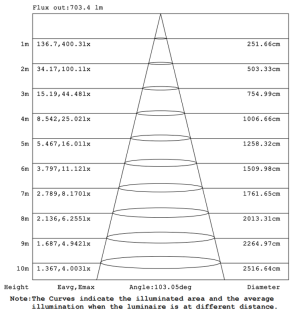

APPROVAL AND APPLICATION

Standard	CB,CE,ROHS
Working temperature	-20 °C ~ + 40 °C

PACKAGE SIZE

PCS/CTN	40
Carton Size	L49.5 x W31 x H32.5

APPLICATIONS

Healthcare, Offices, Schools, Supermarkets, Villas, Hotel, Office, Home